CHAPTER 5
TECHNICAL SERVICES

5.1. Lighting and Power

5.1.1. USER REQUIREMENTS

The users of Track and Field facilities can be categorised according to their activities:

Athletes, Competition Judges and Team Officials

They must be able to see clearly all that is going on in the competition area so that they can produce their best possible performances, and/or make accurate decisions.

Spectators

They should be able to follow the performances of the athletes and other action in an agreeable environment. It follows that they must be able to see not only the competition area but also its immediate surroundings. The lighting should also enable spectators to safely enter and leave the sports facility.

Television Crews and Photographers

For television and/or film coverage, the lighting must be sufficient to ensure that high quality colour images can be obtained, not only of the overall action but also close-ups of both athletes and spectators. Close-up images are important to convey the excitement and atmosphere in a stadium to viewers watching at home.

As the competence level of athletes increases, so too does the speed of the action and consequently visual task becomes more difficult, requiring more light of a higher quality. Therefore, the artificial lighting for athletics is grouped into five classes reflecting the levels of activity:

Non-televised Competitions

- Recreation and training
- Clubs
- National and international

Televised Competitions

- National
- International

5.1.2. LIGHTING CRITERIA

5.1.2.1. Horizontal Illuminance (Eh)

It is the illuminance (measured in lux) on this horizontal plane, at ground level, that chiefly serves to establish the adapted state of the eye, by creating a stable visual background against which people and objects will be seen.

5.1.2.2. Vertical Illuminance towards Cameras (Ev)

Vertical planes are used to simulate the light falling on the body of athletes and objects. Generally, vertical illuminance towards cameras is calculated on a vertical plane 1.5 m above the competition area (orientated towards each relevant camera). However, the height chosen could also differ to ensure that athletes taking part in e.g. High Jump (around 2.5m) and Pole Vault (around 6m) are well lit at all times.

5.1.2.2.1. Ev towards Fixed Cameras

For the coverage of athletics events, it is usual for there to be a main fixed camera position located close to the finish line of the athletics track. This camera is used to maintain an overall view and continuity of the action over the entire area and for the coverage of specific Track Events. In addition, additional fixed cameras are commonly used around the competition area. (see sections 4.2.2.3.2 and 8.8.3.2 for camera positions) For cameras used in this way the calculations should be made specifically for them as described in figure below.

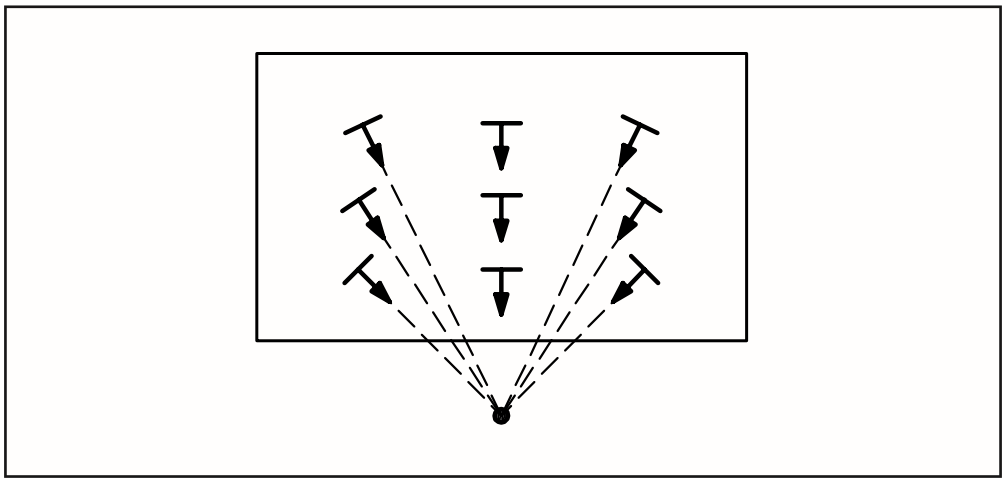

Figure 5.1.2.2.1 – Vertical planes perpendicular to camera axis at each grid point

5.1.2.2.2. Ev towards Mobile and ENG Cameras

It is now common for many cameras to be distributed around the arena to obtain close-up action shots from alongside each event area. However, each camera is only required to cover a small area of the total competition area. It is therefore not necessary to make calculations for each camera over the whole competition area.

In these situations where unrestricted camera positions are used, it is recommended to calculate the vertical illuminance toward all four sides of the competition area and assess the situation for each camera for the appropriate viewing area.

When this type of calculation is used, the uniformity (Ev min./Ev max.) between the four vertical calculations at a single grid point should not be lower than 0.3. This ensures that the modelling for the television camera will be sufficiently high.

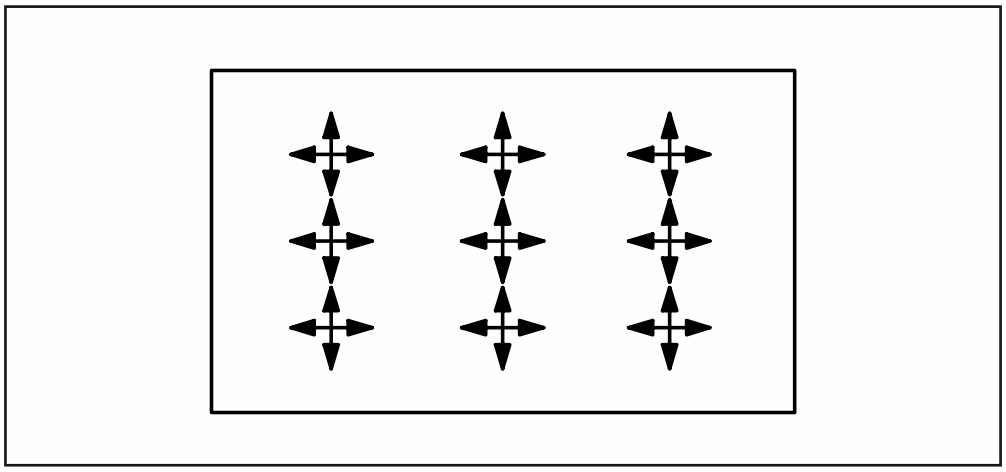

Figure 5.1.2.2.2 – Vertical planes in four orthogonal directions at each grid point

5.1.2.2.3. Ratios

To ensure the television picture has a well balanced brightness, the ratio between the average vertical and horizontal illuminance should be as closely matched as possible, but should not exceed the ratio of 0.5 to 2 times.

To ensure that the reactions of spectators can be captured, it is necessary that the spectator areas immediately adjacent to the competition area (around 15 first rows) be adequately lit. The vertical illuminance level on these spectators should be around but not be less than 25% of that provided for the competition area.

5.1.2.2.4 Planning, Measurement

The given densities of light (Tables 5.1.3.1 and 5.1.3.2) are nominal values (values in use). The planning value or replacement value of the lighting is to be calculated around at least 25% higher because of ageing and soiling of the lights.

5.1.2.3. Illuminance Uniformity

Good Illuminance Uniformity is important in order to avoid adaptation problems for both athletes and spectators. If the uniformity is not adequate, there is a risk that an implement and/or an athlete will not be clearly seen at certain positions on the competition area.

Uniformity is expressed as the ratios of the minimum to maximum illuminance (also called U1) and of the minimum to average illuminance (also called U2):

- U1 = Emin./Emax.
- U2 = Emin./Eave.

In order to guarantee a visually acceptable illuminated field, a Uniformity Gradient (also called UG) is calculated for all grid points (spaced 5m apart). UG is the ratio in percentage of the Illuminance at the grid point to the Illuminance at every adjacent grid point.

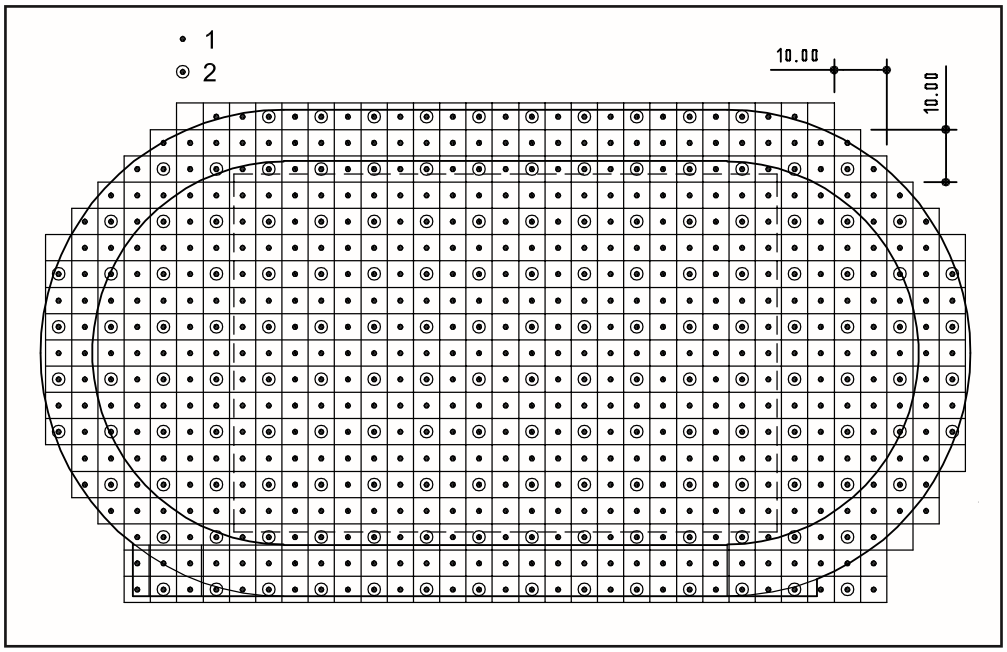

Figure 5.1.2.3 – Calculation and measurement grid for the 400 m Standard Track

5.1.2.4. Glare

Glare is caused by the difference (contrast) between the direct brightness of the lighting installation and the brightness of the competition surface. When the ratio of these two brightness is too high, this will cause visual discomfort or disability.

A method of calculating glare has been defined, resulting in a "Glare Rating" also called GR. GR is assessed on a practical scale of 10 (un-noticeable glare) to 90 (unbearable glare) and should not exceed 50 for any position on the competition area. GR should in principle be calculated for the athlete (observer) positions indicated in Figure 5.1.2.4. However, lighting designers may add positions where they believe particular attention is needed (e.g. Pole Vault or High Jump).

It should be noted that while the "GR" method can give an indication of potential problems, there remains a significant subjective element and the experience from one person to another is likely to be different.

Thought should be given to where reflections are likely to appear in the direction of the cameras in the event of rain. Luminaires should as far as possible be situated such that if the synthetic surface becomes wet that reflections will not be in the direction of the cameras or judges.

5.1.2.5. Colour Properties of Lamps

Good colour perception is appreciated even at recreational and club levels, though becomes more critical for televised events, where natural colour reproduction is expected by today's broadcasters. There are many types of light sources available and

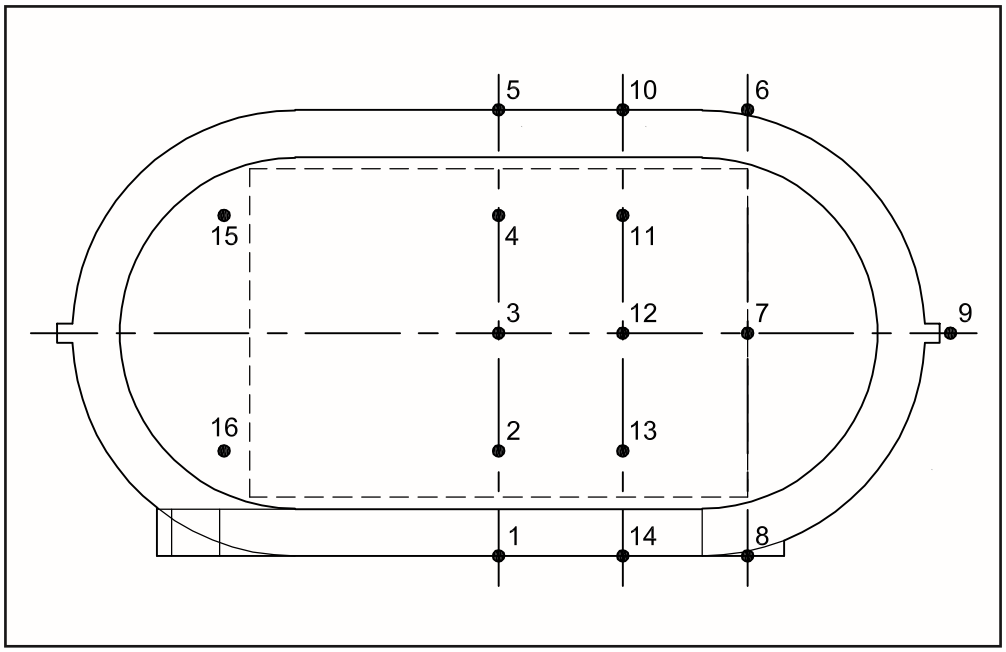

Figure 5.1.2.4 – Observer positions for calculation of glare rating GR

many names used to describe them, however light sources can be characterised by two key parameters.

5.1.2.5.1. Colour Temperature

Colour temperature (also called Tk) describes the feeling or appearance of how warm (red) or cool (blue), a certain type of lighting appears to be; it is measured in "Kelvin" (K).

A suitable range of colour temperature lies between 2000 K and 6500 K for outdoor facilities and 3000 K to 6500 K for indoor facilities.

Lighting systems used in combination with daylight should have a colour temperature close to that of daylight. A camera system can only adapt to one colour temperature at a time. In addition the preferred photographic films for sports usage are daylight balanced to around 5500 K. For televised events, a colour temperature range between 4000 K and 6500 K shall be used and the same colour temperature should be used throughout the facility.

5.1.2.5.2. Colour Rendering Index

Colour rendering (also called Ra or CRI) describes the ability of a light source to faithfully reveal and reproduce the natural colours. Colour rendering is ranked on a practical scale from Ra 20 to 100 where the higher the index the better the colour accuracy.

The degree of colour accuracy of a sports lighting system depends upon the purpose of the installation. For instance, recreational activity is less demanding than

that of televised events where promotional materials must be reproduced accurately. High colour rendering contributes to the quality of televised and photographic images.

5.1.3. LIGHTING RECOMMENDATIONS

5.1.3.1. Non-Televised Events

Where athletics facilities are to be used for non-televised activities, it is only necessary to provide a horizontal illuminance suitable for the required level of activity.

Activity Level	Horizontal Illuminance	Uniformity		Colour Properties of Lamps	
	Eh ave. (lux)*	U1 Emin./Emax.	U2 Emin./Eave.	Colour Temperature Tk (K)	Colour Rendering Ra
Recreational & training	75	0.3	0.5**	> 2000	> 20
Club Competitions	200	0.4	0.6	> 4000	≥ 65
National & International Competitions	500	0.5	0.7	> 4000	≥ 80

** Illuminance values are minimum maintained average values ; initial values are 1.25 times higher*
*** When only the track is to be used and the in-field lights are switched off, U2 should be ≥ 0.25*

Glare Rating (GR)	≤ 50
Uniformity Gradient (UG) per 5 m (Only for National and International Competitions)	≤ 20%

Table 5.1.3.1 - Minimum requirements for non-televised events

5.1.3.2. Televised Events

Where colour television broadcasting is a requirement, it is necessary to provide an adequate vertical illuminance towards cameras across the scene viewed by the camera. If the vertical illuminance toward cameras is not sufficient, good quality broadcast pictures will not be possible.

5.1.3.3. Anti-Panic Lighting

For the purpose of safety and orientation for the spectators, in the event of a main power failure or emergencies, it is recommended to maintain an illumination of at least 25 lux in the stands.

5.1.3.4. Modelling and Shadows

To limit the length and hardness of the shadows caused by the athlete, the distribution of the total flux installed should be no greater than 60% for the main camera side and no less than 40% for the opposite side. The design of the lighting system should be based on light coming from at least two directions (side lighting) or, ideally, from as many directions as possible to create good visibility and modelling in all directions.

Activity Level	Camera Position for Calculation	Vertical Illuminance toward Cameras Ev ave. (lux)*	Minimum Uniformity		Colour Properties of Lamps	
			U1 Emin./Emax.	U2 Emin./Eave.	Colour Temperature Tk (K)	Colour Rendering Ra
National and International Competitions +Emergency TV lighting	Fixed camera	1000	0.4	0.6	> 4000	≥ 80
Competitions of Major International Importance such as World Championships and Olympic Games	Slow motion camera	1800	0.5	0.7	> 5500	≥ 90
	Fixed camera	1400	0.5**	0.7**	> 5500	≥ 90
	Mobile camera	1000	0.3	0.5	> 5500	≥ 90
	Photo Finish camera	2000				

** Illuminance values are minimum maintained average values; initial values are 1.25 times higher*
*** For Finish Line cameras U1 and U2 should be ≥ 0.9*

Ev point over 4 Planes (see 5.1.2.2.2.)	≥ 0.3
Eh ave. / Ev ave. (see 5.1.2.2.3.)	≥0.5 and ≤ 2
Ev ave. First Rows of Spectators (see 5.1.2.2.3.) / Ev ave	≥ 0.25
Glare Rating (GR)	≤ 50
Uniformity Gradient (UG) per 5 m	≤ 20%

Table 5.1.3.2 - Minimum requirements for televised events

5.1.4. INSTALLATION RECOMMENDATIONS

The lighting design for an athletics facility can be based on a number of basic floodlight arrangements. The mounting system employed may be either masts, columns or the structure of the stadium itself such as the roof.

5.1.4.1. Permitted Longitudinal Positioning of the Floodlights

In the majority of cases, athletics facilities will have limited, or no, spectator capacity and can be illuminated using floodlights mounted on columns arranged around the perimeter of the competition area. Where columns are used to support the floodlights, these columns should be positioned at least 4m from the edge of the track to prevent obstruction for athletes using the competition area.

Where the infield is also used for other sports such as soccer at a competitive level, it will be necessary to position columns so that to maintain good visual conditions for the goalkeepers and attacking players from the corners, lighting equipment shall not be placed within a zone of 15° either side of the goal line for televised competitions and 10° for non-televised competitions. (Figure 5.1.4.2.)

5.1.4.2. Pre-Determination of Tower Height

Tower height must be selected so that all parts of the field can be illuminated to the required standard for the number of cameras to be used. Column heights can

initially be estimated by ensuring that the angle subtended at the centre of the competition area to the head-frame centre shall be not less than 25° (h = d x tan α), while ensuring that no luminaire is aimed above 70° from the downward vertical. (Figure 5.1.4.2.)

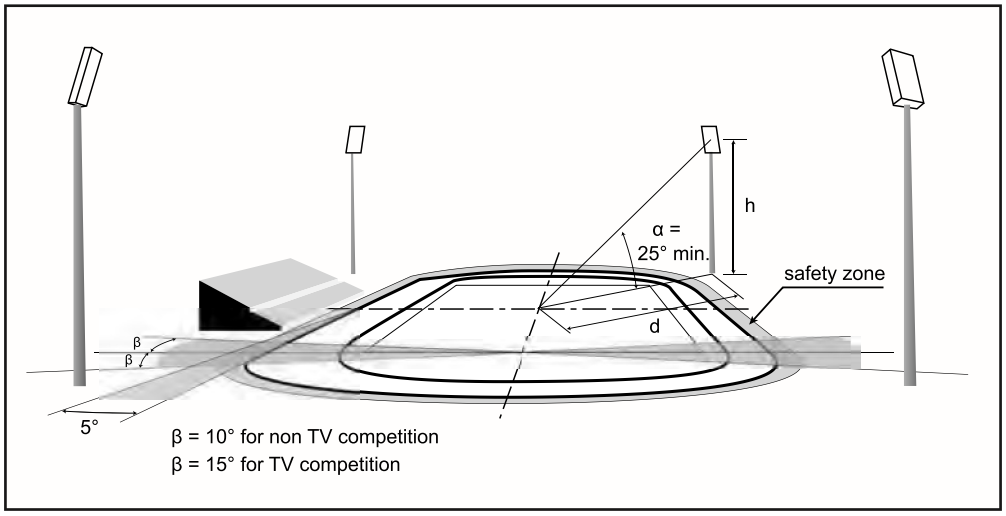

Figure 5.1.4.2 – Floodlights positioning

5.1.4.3. Stroboscopic Effect

All high intensity discharge (HID) lamps, operating on an alternating voltage will exhibit a fluctuating lighting output. This effect is referred to as "flicker" or stroboscopic effect. It is particularly disturbing to television cameras and photo-finish equipment and can cause loss of pictures at a critical moment. It can be minimised by ensuring that the illumination is provided by groups of three luminaires with overlapping beams. Each group of luminaires should be balanced across the three phases whether the individual luminaires are designed for connection between a phase and neutral or between two phases.

5.1.5 POWER REQUIREMENTS

If the high voltage power supply to the stadium comes from one sub station then for major events there should be standby generators either permanent or temporary available to ensure that the meeting can continue in the event of a blackout. In stadia with HID lamps, standby generators should have a "ride through" capability to avoid shut off and new starts of HID lamps which may need several minutes.

5.2 Measurements

The measurement of time, distance and wind speed today demand maximum objectivity and accuracy. The instruments employed must be geared to the needs of the events. So that the spectator's need for information is satisfied, scoreboard