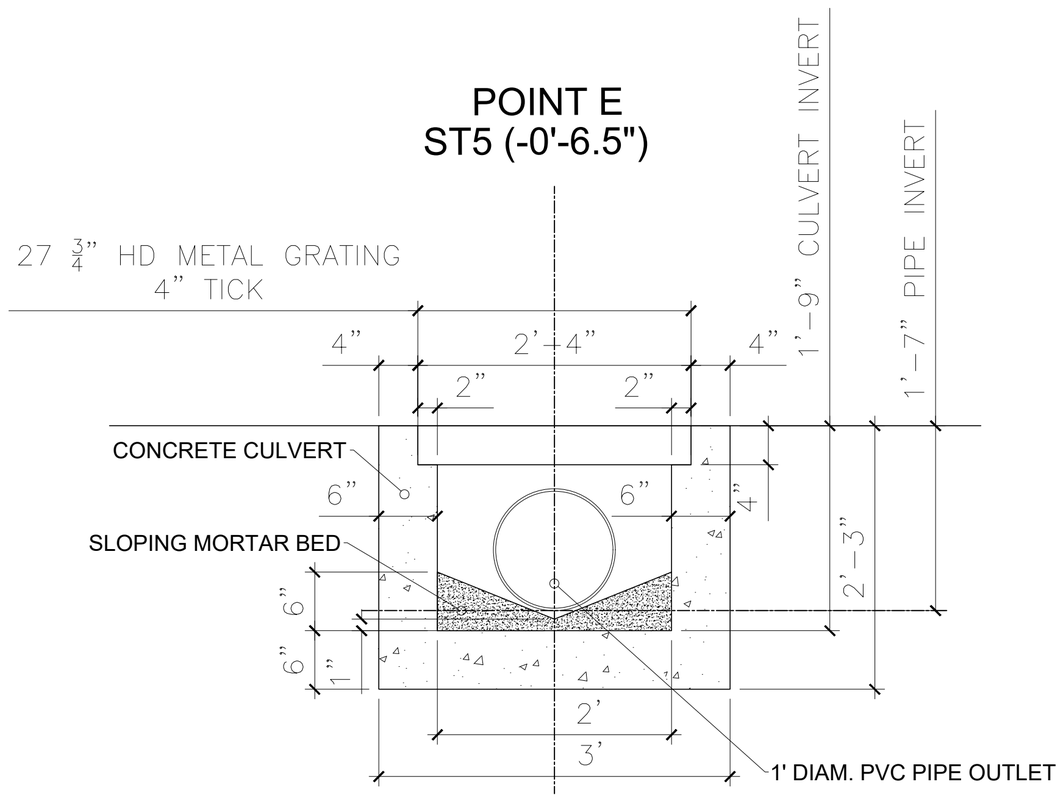

SECTION E
SCALE 1"=1'-0"

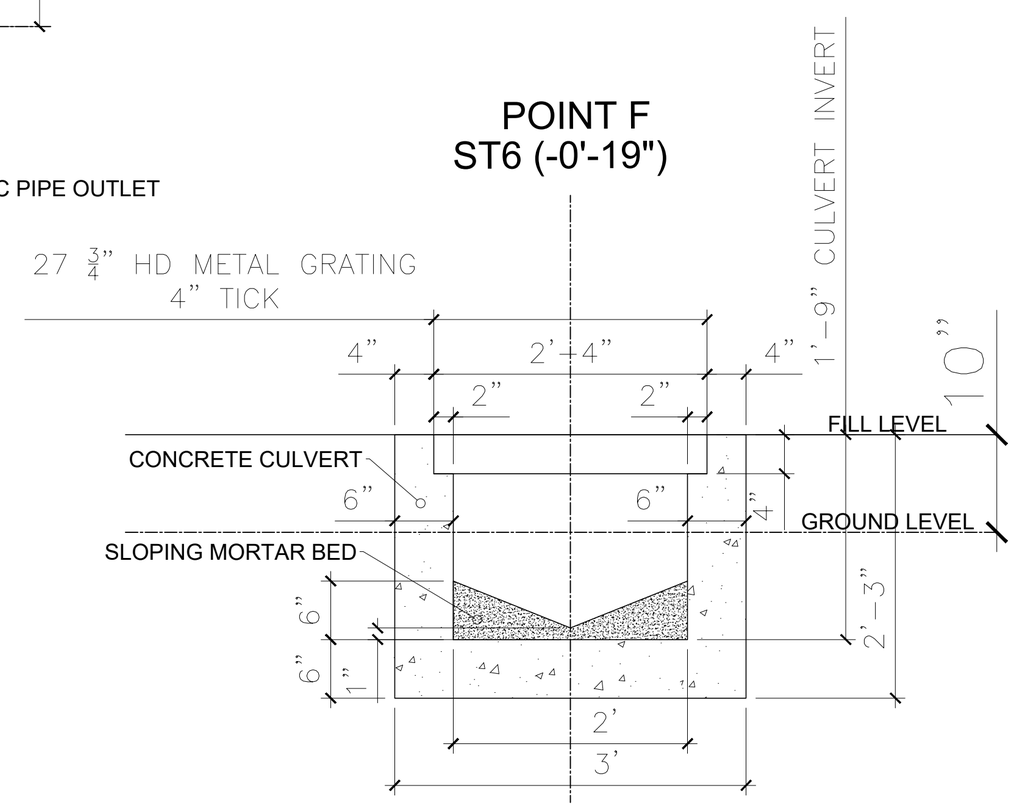

SECTION F
SCALE 1"=1'-0"

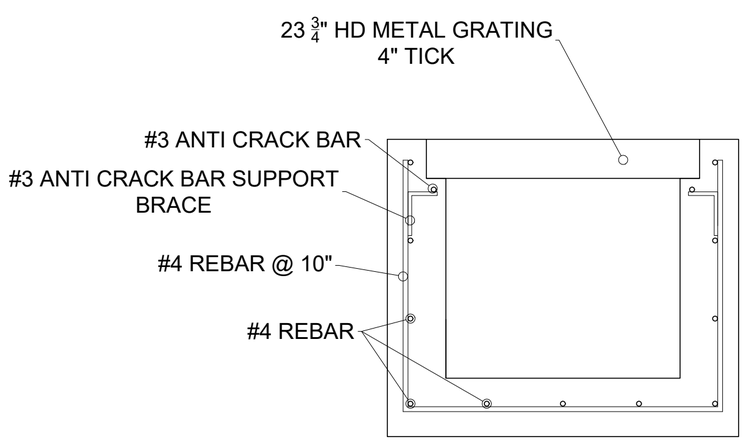

CULVERT TYPICAL STEEL DISTRIBUTION
SCALE 1"=1'-0"

GENERAL NOTES:

1. DO NOT SCALE OFF DRAWING.
2. IT IS RECOMMENDED THAT A LICENSED SURVEYOR IS USED TO ASSIST WITH SETTING THE CORRECT INVERTS TO THE PIPES AND TO MAINTAIN THE DESIGNED SLOPES.
3. THIS DRAWINGS TO BE READ IN CONJUNCTION WITH ALL RELEVANT STRUCTURAL AND DETAILS DRAWINGS.
4. IF IN DOUBT - PLEASE ASK.

SPECIFICATIONS:

1. ALL REINFORCED CONCRETE IN STRUCTURAL ELEMENTS SHALL USE 4,000 PSI STRENGTH CONCRETE MIX.
2. CONCRETE MAX AGGREGATE SIZE SHALL BE 3/4".
3. ALL STEEL COVER WILL BE 2".
4. MINIMUM STEEL OVERLAP WILL BE 26"

VIRGIN ISLANDS RECOVERY AND DEVELOPMENT AGENCY
1st Floor, Ritter House, Wickham's Cay II, Tortola, British Virgin Islands VG1110

MARINE BASE FENCE DESIGN
ROAD TOWN. TORTOLA. BVI

EXTERIOR DRAINAGE DETAILS 2 REV. a

TROJAN DESIGN & DEVELOPMENT LTD.
Box 2923, East End, Tortola, B.V.I.
Tel (284) 344-0258
trojandesigngroup.bvi@gmail.com

DESIGN:	MR. R. LETTSOME MR. M. ALFONSO
STRUCTURAL ENGINEER:	MR. W. BATISTA
CHECKED	
DATE:	FEB. 03 2021
APPROVED BY:	
PLOT SCALE:	1"=1'-0"
PLOT DATE:	FEB. 03 2021

REVISIONS

NO:	REMARKS:	DATE:
	CORRECTION ON GRILL DIM.	3/2/21

FILE NAME:	MARINE BASE FENCE
LOCATION:	ROAD TOWN. TORTOLA BVI

SHEET NO.:
F 11

PROJECT NO.:
RDA-001D/2020